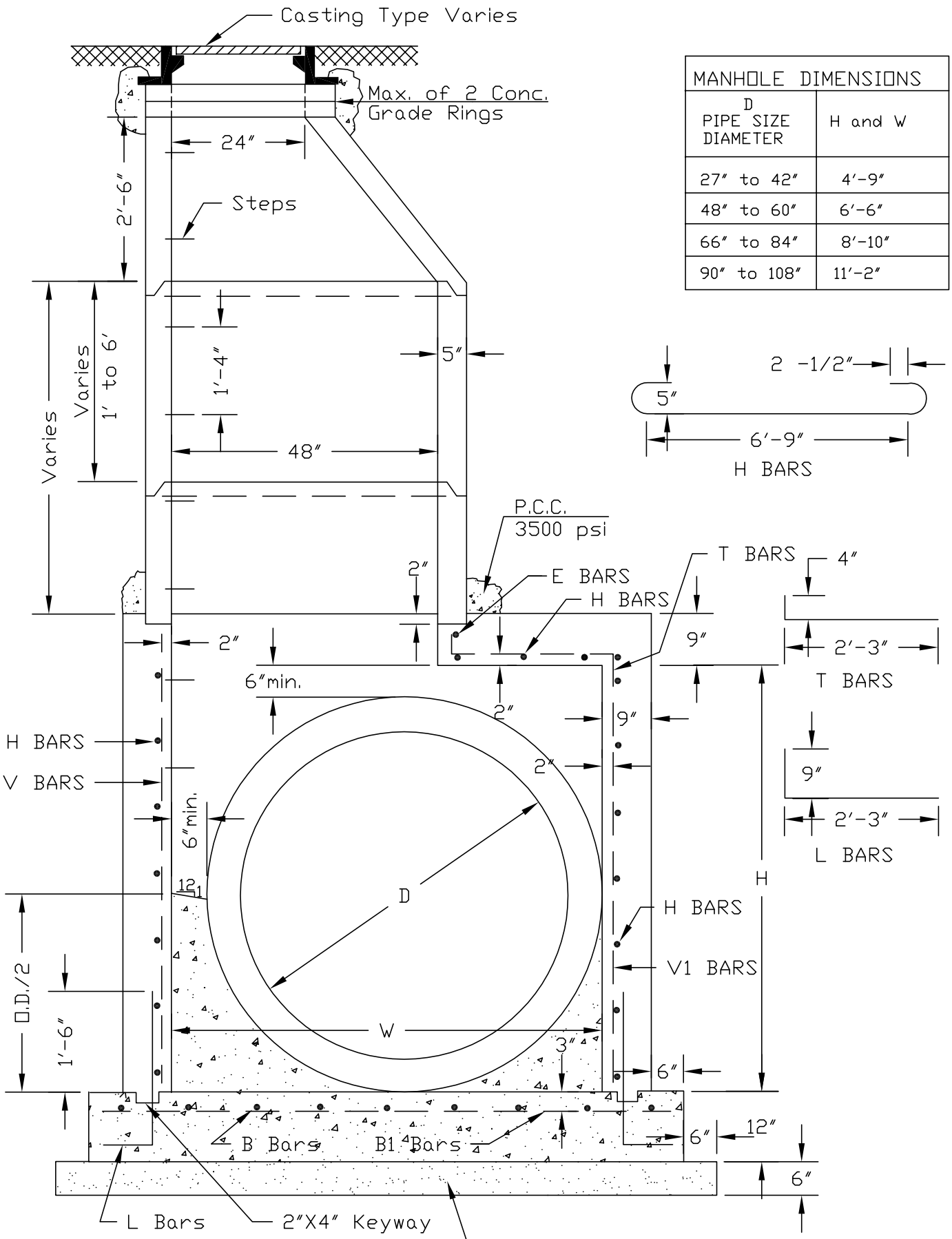

MANHOLE DIMENSIONS	
D PIPE SIZE DIAMETER	H and W
27" to 42"	4'-9"
48" to 60"	6'-6"
66" to 84"	8'-10"
90" to 108"	11'-2"

DETAIL B-5a

Rectangular Manhole for 27" to 108" Diameter Pipes
Scale 1/2"=1' (Rev. Date 10/31/97)